ALU sectional overhead doors

A product of ALPHA Deuren International BV

TÜV NORD Zertifizierung Baumuster geprüft

All-in-one design:

Modern door concept - high quality - optimum performance - extensive range of colours - perfect match for all building designs

Designed and manufactured using the most modern techniques available, the ALU range of sectional overhead doors provides an almost completely transparent barrier between the inside and outside of a building. The ideal solution for situations in which maximum natural light levels and excellent vision are key considerations.
ALU doors are robustly constructed, well-dimensioned and very stylish in appearance. The door design uses aluminium profiles for the individual panels and strengthening braces. ALU sectional overhead doors are made to measure for a perfect fit in the opening.

All these characteristics combine to make the ALU sectional overhead door a high-quality, hard-wearing product that not only improves the appearance of a building but also saves energy and reduces maintenance bills. Easy to integrate into modern architectural designs and fully compliant with the most recent technical requirements in terms of safety and ease of use. ALU sectional overhead doors can be ordered with either manual or electric operation and are available with a closed or fully transparent bottom section.


RABELINK
RABELINK

High-tech production and handling

Effective, sustainable solutions

As a leading manufacturer of industrial doors, we have been actively involved in developing and manufacturing glazed sectional doors for many years. Our current range of ALU sectional overhead doors is acknowledged by many as among the best the industry offers in terms of design and ease of application.
Automatic machines manufacture the ALU door panels and track systems to customer-specified dimensions in an ultra-modern production facility. The spring assemblies are assembled in-house. Other components are manufactured by specialised subcontractors using production tooling that is wholly owned by the manufacturer. All the components that constitute the final door package come together at a predefined location in our warehouse. Ready for delivery.
We are one of the largest European manufacturers of insulated and glazed sectional overhead doors.

We also offer garage doors to similar designs. All our doors are supplied with TÜV NORD certification. The ALU sectional overhead door range is supported by an extensive and highly detailed sales and installation documentation package.

TÜV NORD
Zertifizierung
Baumuster geprüft

Safety and certification:

The standard for the future fully compliant with the EN13241-1 norm

Veiligheid in Safety of operation and application play a key role at the design stage. ALU sectional overhead doors may optionally* be fitted with:

- a spring-break safety
- tracks designed to keep the rollers securely in place and prevent accidental injury to fingers and hands
- a load-related safety mechanism that prevents the door dropping like a guillotine in the event of cable or spring breakage
- a torsion-spring door balance system that compensates for the door weight throughout the opening cycle for maximum ease of operation when operating the door manually
- a cable guide system that keeps the cables inside the tracks to minimise the risk of injury
- an obstacle detection system on the closing face of the door.
  Door movement is arrested as soon as an obstacle is detected
- easy-open manual operation or convenient-to-use electric drives

All ALU sectional overhead doors are certified by TÜV NORD.

As you would expect, our ALU sectional overhead doors have also been subjected to demanding endurance tests. The test doors were operated for 30,000 cycles before being evaluated by expert engineers.

*Some of the safety devices listed here are available as extra-cost options. Every door we manufacture complies with the EN13241-1 norm.

ALU sections from Alpha Deuren

A refined combination of the highest material quality and multiple styling options

ALU sectional doors are constructed from multiple sections to form the door leaf. Specially dimensioned aluminium profiles are used to create a framework that can accept a variety of infill materials.

There are almost no styling and specification limitations as the range of panel infill options offered includes translucent or opaque, partitioned or non-partitioned, tinted or transparent, insulated or with ventilation openings.

A wide variety of materials and designs are available to suit specific customer and application requirements.
Some examples from our range are shown here……

The unique appearance of an Alpha door:

strong,
high quality,
durable,
attractively styled…

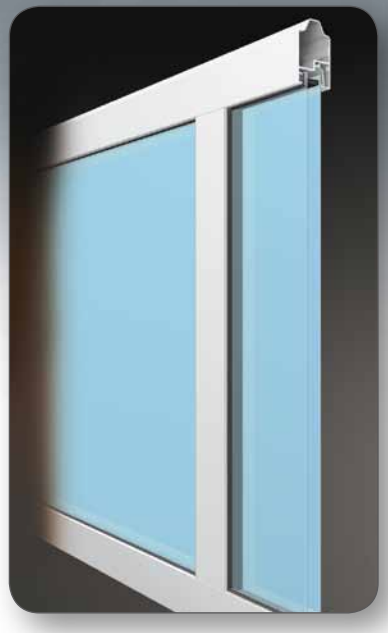

The transparent window panes we use are made of acrylic or polycarbonate.
These materials have a higher degree of transparency and are much more resistant to scratching than styrene acrylonitrile (SAN), which is a commonly used material.

Polycarbonate and acrylic transparent panels are available in single pane and double glazed configuration.
In the double glazed polycarbonate/acrylic configuration, the polycarbonate pane is placed on the outside because of its high impact resistance.

Alpha Deuren sets new industry standards with its innovative 5-pane polycarbonate glazing. In addition to an excellent U-value of 1.7 W/m²K, this material offers outstanding impact resistance, high flexural strength and excellent dimensional stability. Five attractive colours make it easy to create a suitable colour combination for all types of façade cladding.

The gap between the window pane and the frame is sealed by a rubber profile with a multistrand cord core. This system maintains an effective seal even after years of use.
The benefits of our acrylic glazing are explained in greater detail elsewhere in this brochure.

Colourless,
Translucence 63%

Opal,
Translucence 42%

Titan Grey,
Translucence 5%

Pacific Blue,
Translucence 38%

Petrol Green,
Translucence 50%

The aluminium sections are supplied with a high quality anodised finish as standard. The profiles and perforated/non-perforated infill materials can be supplied with a stove-enamelled acrylic paint finish. Customers can choose from an extensive range of RAL colours. Sections without partitions are manufactured from sandwich panels. This panel design features an HCFC-free high-density polyurethane core that is sandwiched between two galvanised steel sheets.

The outer face of the panel is microprofiled as standard. ALU sectional overhead doors incorporating the microprofiled section design have visual qualities that blend in perfectly with modern industrial architecture. ALU sectional overhead doors featuring sections without partitions are the most attractively priced solutions and also offer the strongest structural configuration.
Damage to the bottom section in this configuration can be repaired more cost-effectively than doors that feature a bottom section equipped with insulated stucco-embossed infill panels.
This type of ALU sectional overhead door also offers excellent sound-deadening and thermal insulation performance and is highly resistant to the effects of the weather.

Colour range

The right colour for every architectural requirement

The aluminium sections for the ALU sectional overhead door are supplied with a silver-anodised finish as standard.
This very attractive, low-maintenance finish is corrosion-resistant and has excellent weathering properties. However, as you would expect, our ALU sectional overhead doors can also be painted to suit individual corporate colour schemes.

When ordered with ISO microprofiled panels, the ALU sectional overhead door is available in 12 standard RAL colours (our standard colour range).

The ALU sectional overhead doors can also be supplied in a wide variety of RAL colours at extra cost.

Colours that are not available in the RAL system can also be made to order if a colour sample is available.

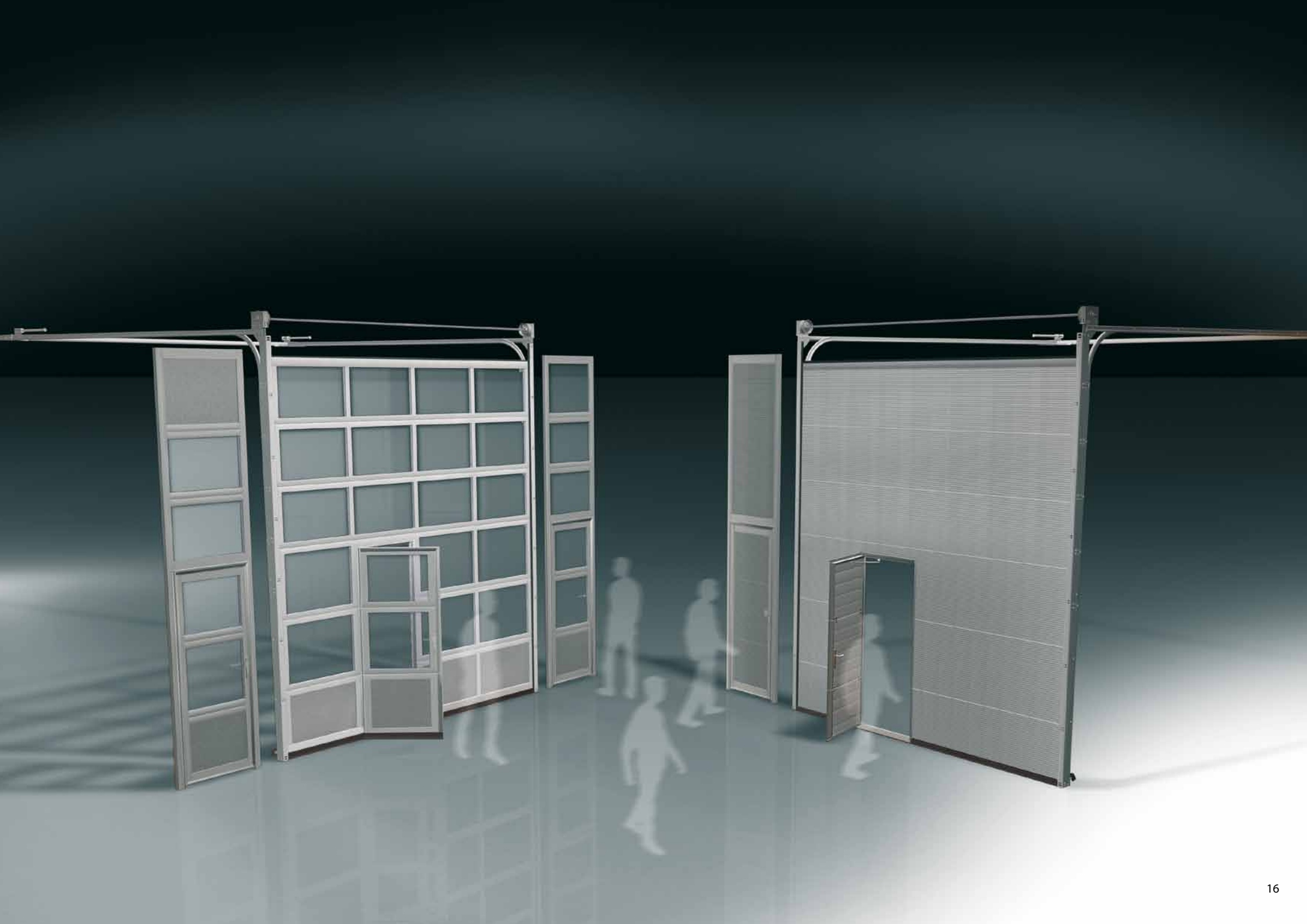

Pass doors

Unimpeded access and energy saving

A pass door can either be incorporated in the main sectional overhead door (this type of pass door is often referred to as a wicket door) or, if there is enough room available, mounted as a separate side door to the side of the main door in a permanent door frame. The wicket door or side door avoids unnecessary operation of the main sectional door. Integral wicket doors, which always open outwards and are fitted with automatic door closers, are supplied either in DIN-left or DIN-right configuration.

Side doors are also supplied either in DIN-left or DIN-right configuration, can open either outward or inward and are fitted with an automatic door closer if required.

The built-in pedestrian door is also as an option available with a sill lowered to 13 mm. The new, virtually sill-free pedestrian doors offer safe unimpeded access for pedestrians. The sill, which is bevelled either side, provides access for equipment on wheels. The frequency of use of the sectional door is reduced, which yields immediate energy savings. The structure provides an excellent seal at the bottom due to the short sill length. In addition to the sill, the standard rubber seal hugs the floor, providing a good seal here as well. Hence there is no need for vertical adjustment of the sill.

The bottom of the sectional door is protected with an optical obstacle detector running ahead of it, with double sensors. This detector ensures contact-free reversal of motion as soon as any obstacle is detected in the door opening. When an electric drive is fitted, the main sectional overhead door may only be operated if the integral wicket door is securely closed. If at all possible, provision for an adequately dimensioned door opening or extra side doors should be made during the initial stages of the building design. An extra side door, whether integrated in a separate door frame or not, is the preferred solution in terms of structural integrity and maximum safety. The sectional overhead door without an integral wick wicket door offers the best structural strength.

Option: built-in pedestrian door with lowered sill lowered

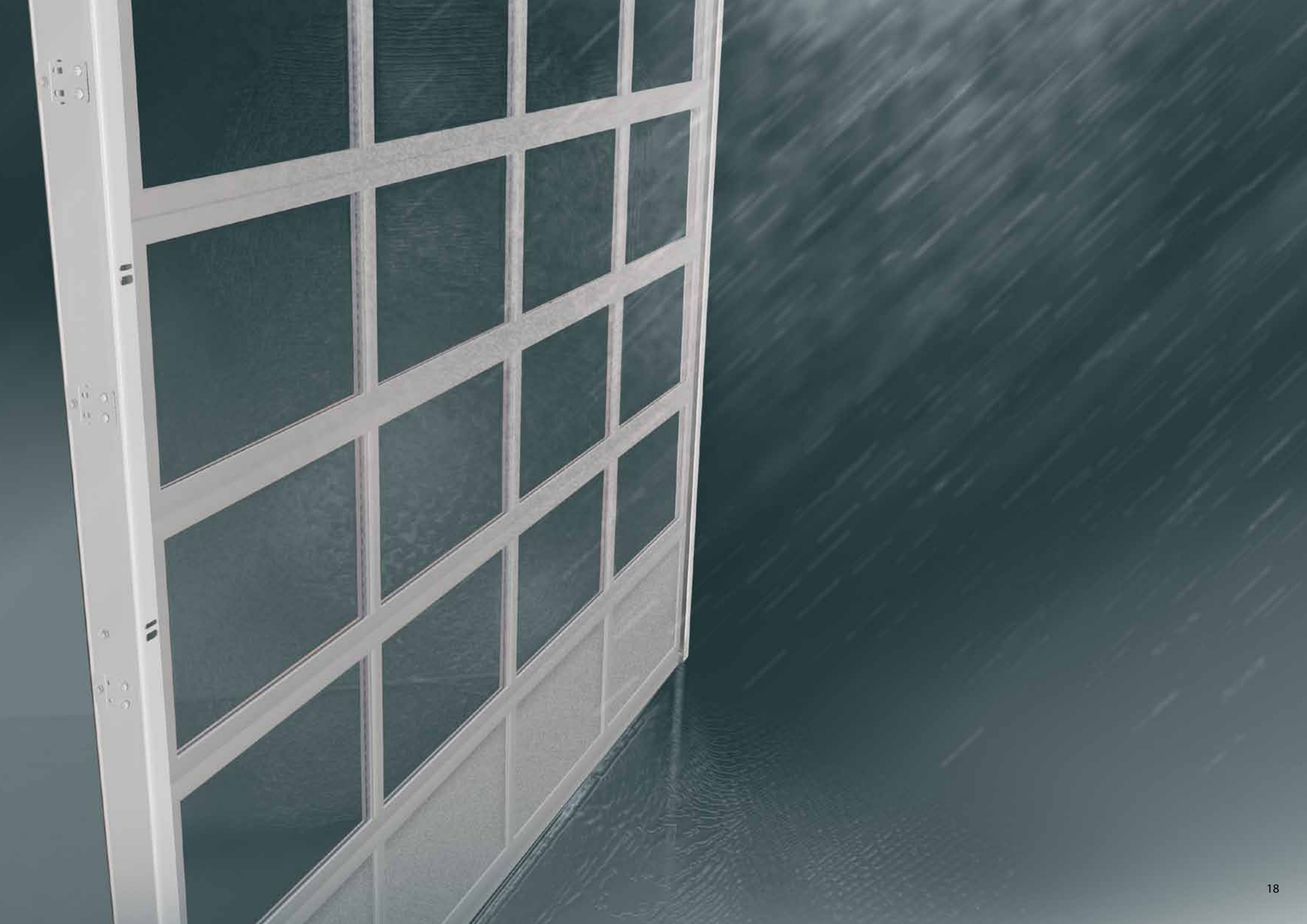

Resistance to weathering

Suitable for all climates

ALU sectional overhead doors are constructed from section frame profiles and strengthening braces* that are made of anodised aluminium. The stability and corrosion-resistance of this type of construction make the ALU sectional overhead door design hard-wearing and durable.

The type and shape of the materials used to seal around the periphery of the door prevent rainwater and draughts entering through the clearance gap between the door leaf and the opening support structure.

*The use of strengthening braces depends on the door configuration and is determined by the manufacturer's build parameters.

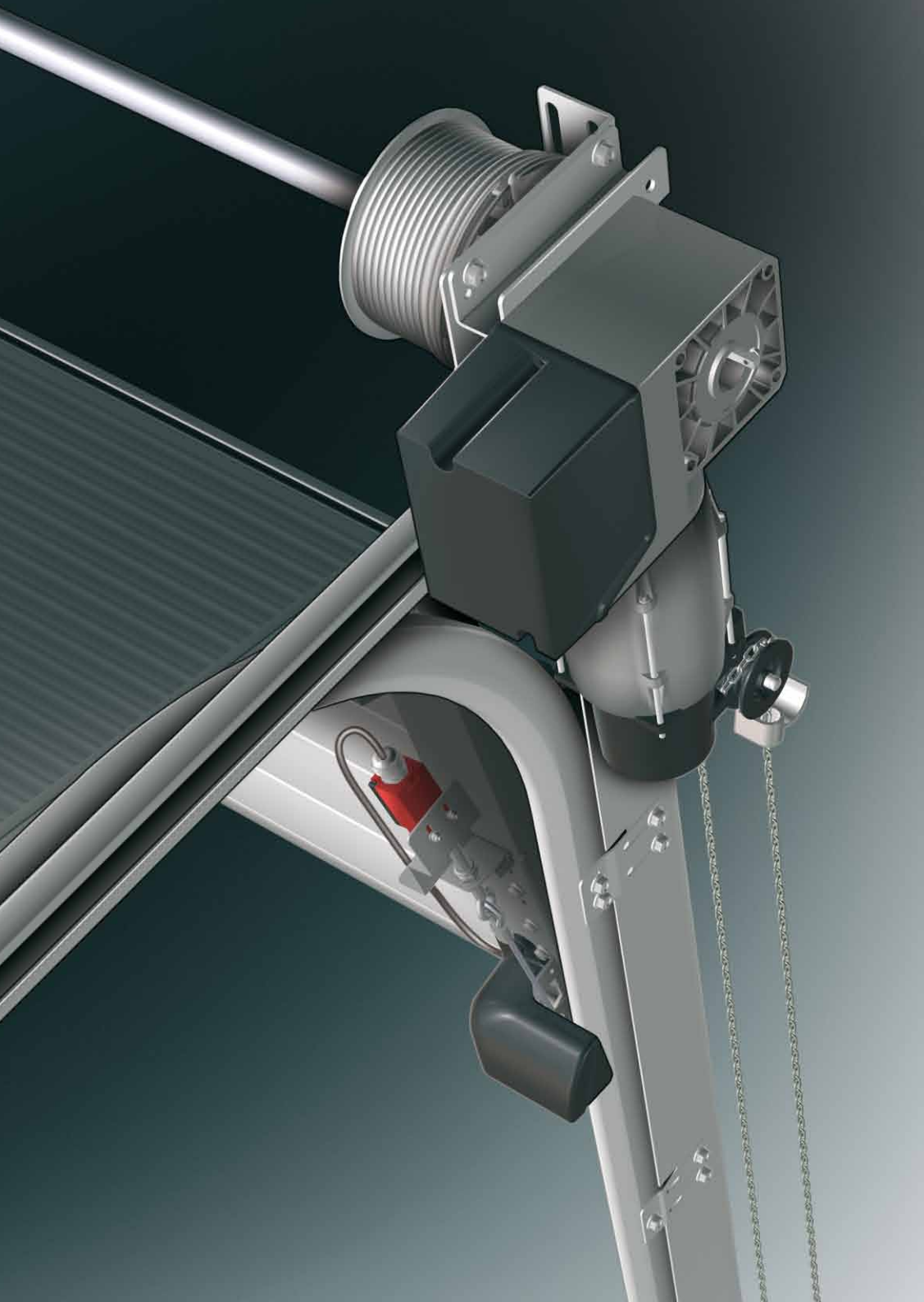

Door leaf finish and hardware

Attention to detail makes all the difference

One can choose between various electric drive systems, a chain hoist and a pull-cord for door operation. The sectional door is fitted with mechanical and electrical safeties that comply with the EN13241-1, EN12453-1 and EN12604 norms.
The sectional door system is safe and convenient to use in all aspects.

High-speed drive, the standard for modern plant management.
Using high-speed drive further expands the range of applications for sectional doors. Short opening and closing times reduce heat losses and substantially increase transit speed. The system is available with pushbutton control and variable speed control, it is suitable for remote operation. The speed control has a favourable impact on the service life of the sectional door system. Gradually accelerating away from and slowing down approaching the end-of-travel positions reduces mechanical loads on the structure. This system can be used with door leaf areas of up to 25 m^2.

Electric drive with fully automatic operation (impulse)
Drives with impulse operation are suitable for sectional doors that are operated very frequently. During opening and closing, the door automatically moves to the appropriate end position, which can be adjusted electronically. When in the fully open position, the entire door opening is available.
An obstacle detection system (safety edge) is incorporated in the bottom seal of the door. When the photocell beam of the safety edge system is broken by contact between the seal and an obstacle, the sectional door will stop and reverse.
The system can be automated further by adding remote control, induction loops, radar detectors or a timer system that closes the door again after a preset delay.
This very convenient drive/operating system is the most common choice and is suitable for a door leaf area of up to 50 m^2.

Safety devices

Electrical
- Slack cable safety
- Obstacle detection system
- Stationary photocell

Mechanical
- Emergency opening system in the drive gearbox
- Spring break safety
- Cable break safety

Electric drive with semi-automatic operation
The electric drive with semi-automatic operation is a good choice for sectional doors that are not operated very frequently. The upward movement of the door is initiated by pressing and releasing a button. The sectional door opens automatically and stops when it reaches the upper end position, which can be adjusted electronically. The appropriate button for the downward movement has to be pushed and held down during door operation (deadman operation). This type of operation is suitable for sectional doors of up to 50 m² door leaf area. Operator convenience is acceptable; but cannot be automated further.

Chain hoist operation (1:4 ratio)
Chain hoist operation is suitable for sectional doors that are not operated very frequently. A chain tensioner is included in the system, further optimising ease of operation and safety. This type of operation is suitable for medium-sized sectional doors of up to 25 m² door leaf area. When used correctly, the sectional door can be fixed in the upper end position. This system requires physical exertion.

Pull-cord operation
Pull-cord operation is suitable for sectional doors that are only operated on very rare occasions. This type of operation is suitable for sectional doors of up to 12 m² door leaf area. The disadvantage of this type of operation is that the door may not be opened fully or not opened to a sufficient height, which may lead to impact damage.
It is impossible to secure the sectional door in a particular opening position.
This system requires physical exertion.

Obstacle detection system
The maximum force the obstacle detection system (safety edge) may exert is defined in the EN13241-1 norm.

Running ahead optical obstacle detection system
The bottom of the sectional door is protected with an optical obstacle detector running ahead of it, with double sensors. This detector ensures contact-free reversal of motion as soon as any obstacle is detected in the door opening.

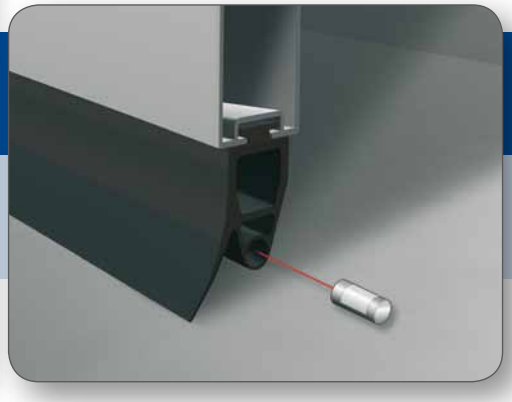

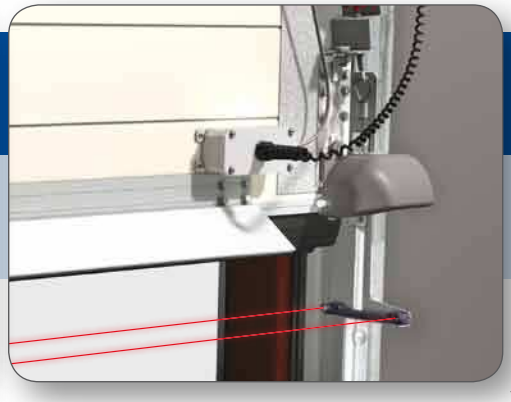

Door leaf finish and hardware

Quality and attention to detail make all the difference

Track system details

The track systems are unique in terms of profle, choice of materials and finish. Operator safety, durability and reliability were primary considerations when designing the track systems. Furthermore, dealer feedback is used to continually optimise the designs.

This is an ongoing process, which, for example, has resulted in a design that makes it impossible for operators or bystanders to insert their fingers into the tracks.

All the tracks are manufactured in house to our own designs, using the latest, highly advanced production techniques. As you would expect, the materials used are galvanised to a high standard. All track joints use nut and bolt fixings for maximum ease of maintenance and repair. The materials used and the design of the rollers ensure precisely controlled door movements with a minimum of noise nuisance.

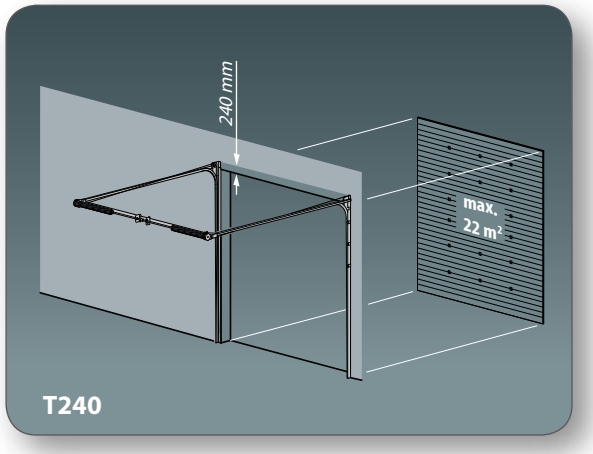
240 mm
max.
22 m²
T240

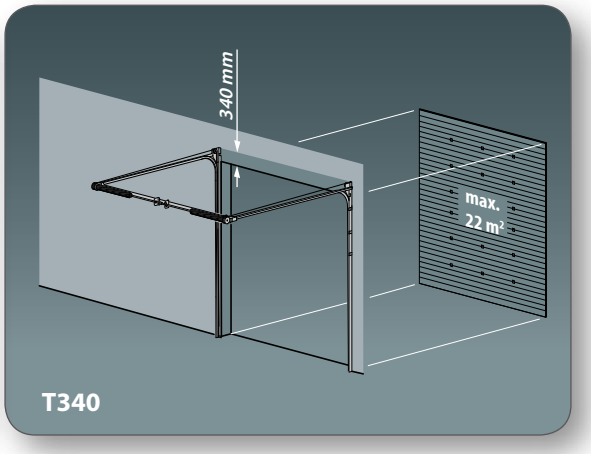
340 mm
max.
22 m²
T340

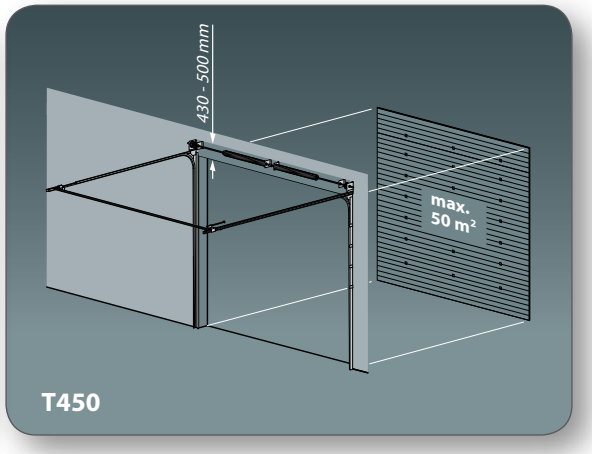
430 - 500 mm
max.
50 m²
T450

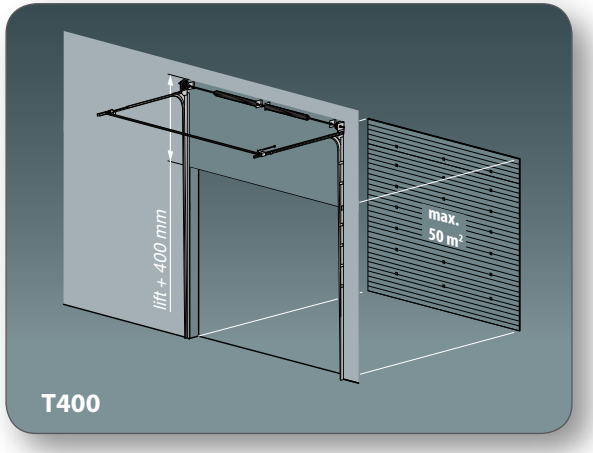
lift + 400 mm
max.
50 m²
T400

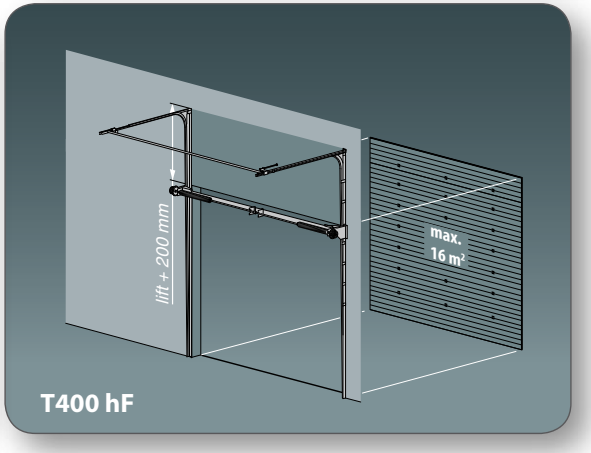
lift + 200 mm
max.
16 m²
T400 hF

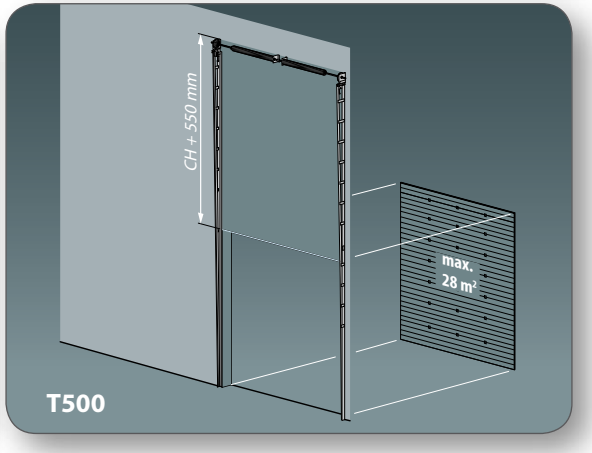
CH + 550 mm
max.
28 m²
T500

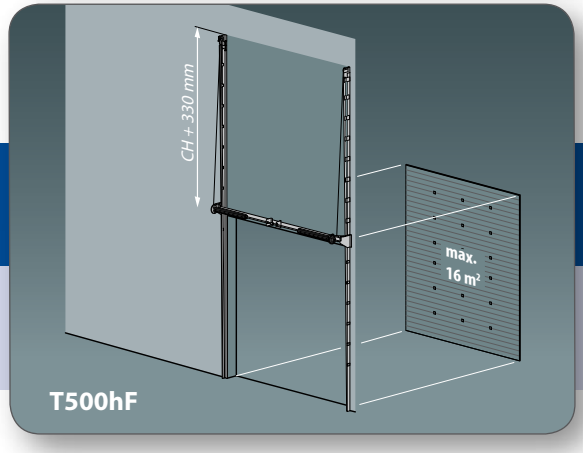
CH + 330 mm
max.
16 m²
T500hF

Concept & realisation: Thesus Talking Image bv, www.thesusti.nl

alpha
deuren international bv

ALU-GB-29070102-2_Alpha

A product of ALPHA Deuren International BV